RollSCAN-1 Application Note AN-001

Adapting CCD Scanner Heads to Wide Music Roll Scanning

or

HOW TO "FRANKENSTEIN" YOUR ROLL SCANNER

for "Rollscanners" discussion group
May 25, 2001

Author: Eugene P. Gerety
Date: May 25, 2001
Current Revision: A (preliminary)
Revision Date: May 25, 2001

Frankenstein, `'fra[ng]-k&n-"stIn`, ***v.t.*:** to make or put together roughly or hastily from parts of separate and unrelated items to form a somewhat unnatural or unlikely combination; **COBBLE TOGETHER**
Ex:<…the band was trying to reproduce on stage the hodgepodge of sounds they had Frankensteined *together in the studio.>, Ex: <…Another notable work is Sea Nymph, which is simply a blown-up photograph of Barry Norman's head* Frankensteined *onto an encaustic rendering of Michelle Pfeiffer's body, painted over with opaque emerald green.>*
Etym: From the title character in Mary W. Shelley's gothic novel *Frankenstein,* who creates a monster (by which he is eventually killed) by joining together parts of numerous corpses

OVERVIEW

This application note describes, in detail, the steps necessary to scavenge a scanning head off of a conventional low-cost CCD-based flatbed scanner and graft or "Frankenstein" it onto a home-made transport system for scanning music rolls of virtually any width.

Most CCD-based flatbed scanners are designed to scan 8.5" wide documents and using a moving line-scanning head that moves travels a glass document window on which the document is placed. On most of these scanners, an arrangement of carefully placed mirrors "folds" the optical path so that it will fit into a relatively compact, one-piece scanning head.

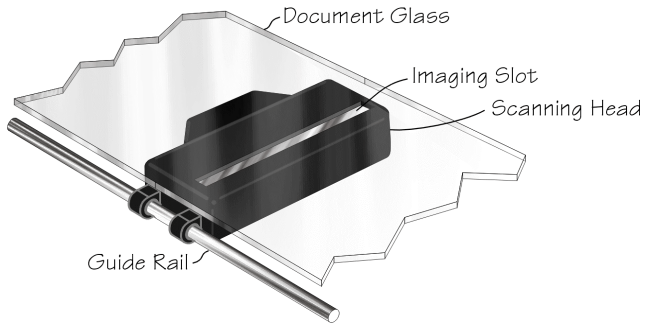

Typical CCD-Based Flatbed Scanner

A portion of the internal arrangement of a typical flatbed scanner of this type is shown in the illustration to the left.

To adapt a CCD-based scanning head to scan music rolls a couple of adaptations must be made. First, to scan wider formats, the scanning head must be moved farther away from the "document" (the music roll) and re-focused. Second, since the music roll must be unrolled from a supply spool to a take-up spool in order to scan its entire length, it makes the most sense to change to a fixed-head configuration with the music roll scrolling past the scanning head.

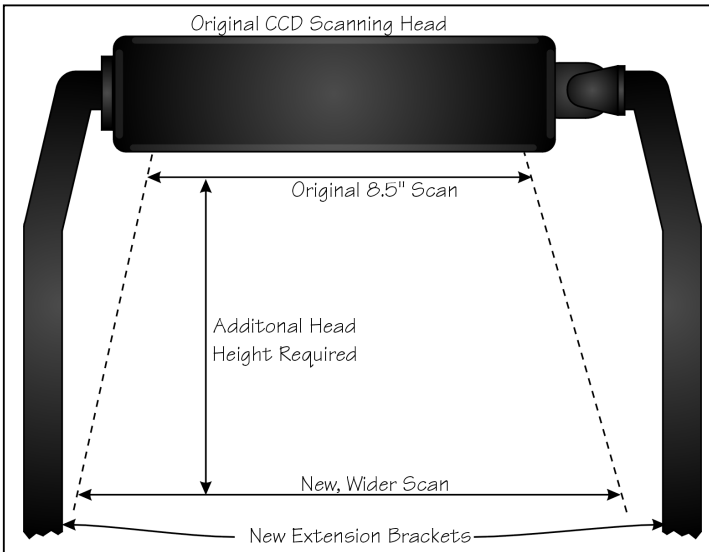

Adaptation for Fixed-Mount and Wide Scan

This configuration is shown in the illustration to the left. The scanning head is inverted and suspended in a fixed position above the path of the music roll by a pair of extension brackets.

The proper height of the scanning head is determined by the maximum scanning width required and the length of the scanning head's internal optical path. The techniques for determining this height are discussed later in this application note. Illumination schemes and illuminators will be dealt with in a separate application note.

Background: CCD's and CIS's

One of the biggest challenges for a hobbyist in designing and building a Roll Scanner is coming up with a suitable image sensor. In most cases, there are really only two viable choices:

- Contact Image Sensor (CIS) Modules; and
- Linear CCD (Charge Coupled Device) Sensors

CIS modules have the attraction of being compact and completely self-contained. That is, a typical CIS module is a complete, pre-focused scanning head with a built-in illuminator and has an incredibly small cross-sectional area. It images by placing it directly against the object you wish to scan. When a CIS module is in contact with the thing it's scanning, it's in focus.

By way of contrast, just about any other type of image sensor (including CCD's) requires an external illuminator, a (relatively expensive) three or four-element lens assembly, a way to focus it and lots of space for the optical path. Even though a typical CCD image sensor chip is much smaller than a contact image sensor, the length of the optical path in a CCD-based flatbed scanner (assuming 8.5" scanning width) is almost always 17" or more! (We'll get into the reasons for that later.)

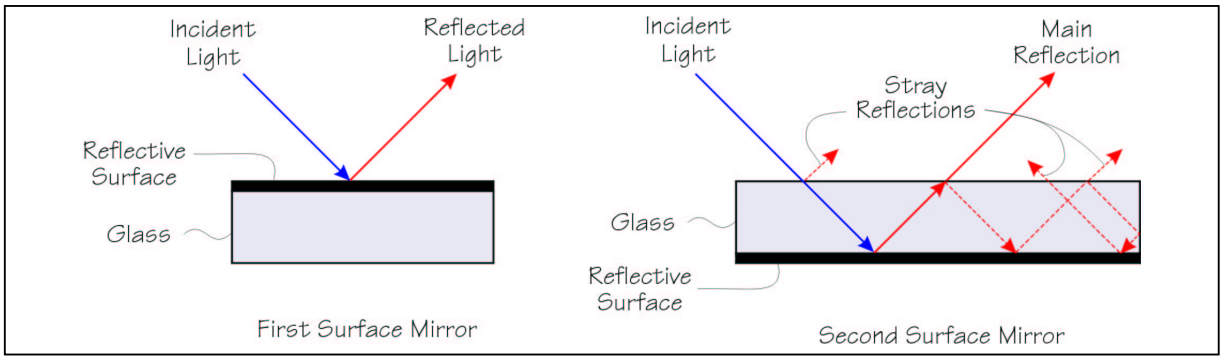

Because of the long optical path, virtually every CCD-based flatbed scanner employs a "folded" optical path where three or more mirrors are used to create a zig-zag optical bounce path that "folds" the optical path up to occupy less space. These mirrors are usually "first surface" mirrors which are considerably more expensive than your average bathroom-type mirror of the same size.
As shown in the illustration above, "first surface" mirror has its reflecting surface on top. A "second surface" mirror, (like a bathroom mirror) has the reflective coating on the back surface and light has to pass through a layer of glass before it is reflected. The problem with second surface mirrors is that the top (glass) surface reflects a small portion of incident light on the way in and every time the reflected light encounters a glass-to-air interface. Internally reflected light is re-reflected and bounces around between the various surfaces of the glass with a certain amount escaping at each glass-air boundary. This causes regularly-spaced "ghost" images due to stray reflections, weaker than the main reflection and becoming weaker with each subsequent reflection. These stray reflections are usually not very noticeable after the first or second "bounce" but become more noticeable around brightly-lit objects.

First surface mirrors are more expensive than second surface mirrors, but they are essential for a high-quality scanner. With second surface mirrors, there would be too much "ghosting".

Contact Image Sensors Aren't Well-Suited to All Applications

Despite everything described above, CCD-based scanning systems have still have some advantages over CIS modules. Conversely, as many attractions as CIS modules have, they have a number of limitations – even fatal limitations in some applications. For example:

Some disadvantages of CIS modules compared to CCD/lens combos

- CIS modules have *extremely* shallow depth of focus, usually only about ±0.5mm (about 0.020", the thickness of a fine-line mechanical pencil lead). If good contact isn't maintained between the subject and the sensor, it goes out of focus very quickly. Wrinkled documents cause real problems for CIS modules. A typical CCD/lens combination has a depth of focus closer to ±0.5 - 0.75 inches. Wrinkles are more easily accommodated by a CCD/lens combination.
- In CIS modules with LED illuminators, the illuminator is carefully collimated with a cylindrical lens and aimed to strike the subject at exactly the focal point of the module. As the subject moves out of contact with the CIS module, the illumination misses the subject and the resultant scan is dark (in addition to being out of focus). This is not as severe a problem in CCFL-based CIS modules and CCD scanners where the CCFL (Cold Cathode Fluorescent Lamp) floods a larger area with light and the image brightness falls off more gradually as the distance from the illuminator increases.
- With a lens, you can make the scanning width of a CCD-based scanner practically anything you like. CIS modules, however are *strictly* 1:1 imaging systems. Their scanning width is absolutely fixed and can't be changed.
- The signal-to-noise ratio (S/N ratio) for most modern CCD's is better than for most CIS modules. For really high-quality photographic scanning, CCD's produce better subtle shading (shadow and highlight detail). This is not really important for roll-scanning, but it can be a big factor in designing flatbed scanners.
- It is difficult, if not impossible to get wide CIS modules. A couple of manufacturers, including Taiwan-based Dyna Image, make CIS modules in 12" widths for scanning A3 and B-size (11"x17") sheets, but they can be hard to acquire, especially in smaller quantities. No U.S.-based vendor currently sells off-the-shelf contact image sensors wider than A4 width (approximately A-size: 8.5" wide).

For many of these reasons, CIS modules are primarily found in low-end scanners, and in specialty scanners where specially designed CIS modules are used for specific purposes.

A few really wide scanners, like sheet-fed drafting scanners capable of digitizing an E-size (34" x 44") sheet, use specially fabricated, ultra-long CIS modules. Despite the fact that these scanners are really no more complicated than a fax scanner, they cost tens of thousands of dollars – mostly because of the CIS module itself. This is because: 1) it is more difficult to maintain mechanical stability, illumination uniformity and to acceptable S/N ratios on long CIS modules than it is on shorter modules and 2) there is not much demand for long CIS modules, so economy of scale is never achieved.

WHEN YOU SHOULD USE A CCD INSTEAD OF A CIS MODULE

So, when should you use a CCD scanning head? Use CCD's for roll-scanning for:

- scanning rolls wider than 12";
- scanning wrinkled paper (results in poor focus and spotty performance on CIS modules; or
- you plan to scan ordinary 11.25" piano rolls, but you can't get a Dyna Image A3 CIS module and you don't want to mess around with overlapped short CIS modules

Where to Find CCD Scan Heads and How to Use Them

Fortunately for music-roll scanning enthusiasts, low-cost, used CCD-based flatbed scanners are *everywhere* these days. Most of these scanners are available inexpensively and have rugged, well-designed one-piece folded optical systems. All you need to do is find a suitable one and pull out its scanning head in one piece. All of the lenses and mirrors are already in place in a high-quality housing. All we need to do is find a way to change the width of its scanning path. As you will find out in the following sections, that's pretty easy to do after you've determined a bit of technical information about scanner's optical and electronic systems. With a little bit of luck, you'll be able to get that information from others who have gone before you.

There is a certain amount of technical information that you'll need about any "donor" scanner to be able to use its scanning head. If you have some basic electronic skills, you should be able to follow the instructions in the remainder of this application note quite easily to extract the necessary data. If not, you need to get the assistance of an electrical engineer or find others who have already investigated your scanner and who are willing share the results. Within the Rollscanners group, I expect that technical specifications and measurements for a variety of "donor" scanners will quickly become available as group members locate suitable scanners.

The specific pieces of information that need to be determined about any "donor" scanning head are:

1) Approximate optical path lengths
2) CCD manufacturer and part number (lets you find CCD data sheet)
3) Useful mounting points
4) Scanning head cable connection info:
    - power supply voltages and pin/wire numbers
    - illuminator control signals and pin/wire numbers
    - CCD clock/timing signals and pin/wire numbers
    - CCD analog output signal(s) and pin/wire number(s)

Once you have this information, the remainder of the process can be accomplished without much difficulty.

IMPORTANT NOTE:
There are two methods for determining optical path information: an empirical method and a direct measurement method. If you plan to use the empirical method for determining the optical path lengths, keep your scanner intact and working until AFTER you are satisfied that you have accurately measured the optical paths.

SCANNER HEAD SURGERY – Step by Step

There are 6 basic steps in "Frankensteining" your roll scanner:

1) Select an appropriate donor scanner
2) Determine the 4 basic items of technical information (see above) for the donor scanner, or get the information from someone who has already done so.
3) Calculate new path lengths and determine head height
4) Build a scanning head holder and light shield for your transport
5) Connect CCD to new scanner controller and test
6) Re-focus the CCD

Step 2 may require a certain amount of technical expertise and possibly a "sacrificial" scanner. Fortunately, this only needs to be done once for any given scanner. As soon as one person has gone through the process and published the results, it will be relatively simple for the average hobbyist to repeat those results with nothing more than some basic model building skills. In all probability, most hobbyists will not need to perform step 2 by themselves.

Step 1. Selecting the Donor Scanner

The most important step in selecting a suitable "donor" scanner is picking one with modest resolution, rugged, high-quality optics, and uncomplicated electronics. Generally speaking, this points to older, 300 and 600 dpi scanners (late 90's models).

What you WANT: You want a scanner with a one-piece folded-optical assembly and a two or three-piece electronics package where the CCD is separate from the scanner's signal processing circuitry. Most scanners built since the early-to-mid 90's have single-piece folded-optical assemblies. Up until the last couple of years, most scanners had separate circuit boards for A/D conversion and signal processing. Good bets are older HP, Microtek, and Umax scanners. They're built like tanks and are relatively uncomplicated to work with. They are *everywhere* and can often be purchased for as little as $15-$25. (It's hard to sell them for much more when you can easily go out and buy a brand new scanner with higher resolution and better color depth for $79 or so!)

For roll scanning, color is completely unimportant. If you have a good 8-bit grayscale scanner that otherwise has the right characteristics, it will work just fine.

What you DON'T want: Some very old flatbed scanners used a three-piece optical assembly with a fixed-mounted CCD and lens, and two moving mirror assemblies. One mirror assembly traveled at half the speed of the other. Optically speaking, it was a straightforward design, but very cumbersome from a mechanical point of view, and not well suited to roll scanning.

You don't want a high-resolution scanner (e.g., greater than 600 dpi). There are too many pixels. This increases the amount of data your scanner's conversion circuitry has to deal with, consequently slowing down your scanning speed. For roll scanning, you don't need the resolution – not even for 25" wide organ rolls.

You don't want the A/D conversion and signal processing electronics integrated onto the CCD board. This makes it more difficult to find the CCD's drive signals

and separate them from the scanner. If the CCD board looks like it has more than a couple of chips and a few discrete components, you probably don't want it.

The photographs that follow should give you a pretty good idea of what to look for in a "donor" scanner. There are two examples of scanners that have the right characteristics, and two examples of scanners with one or more wrong characteristics.

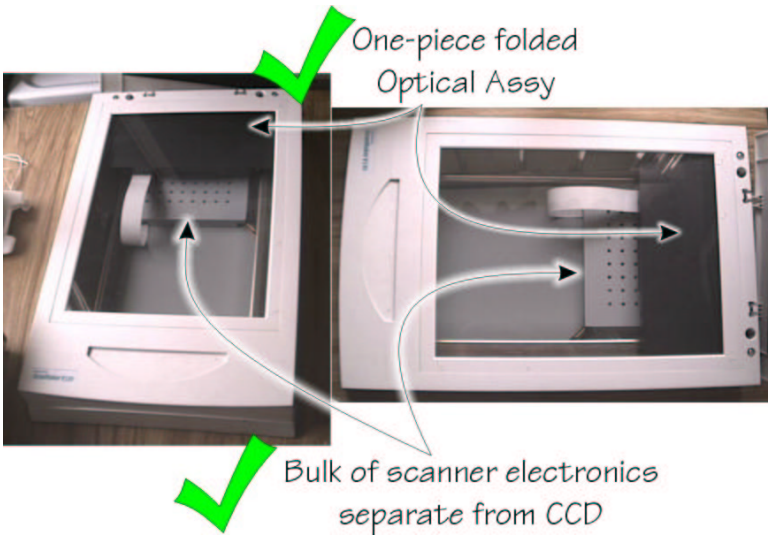

Microtek Scanmaker V310

The scanner shown at left would make a good choice, based on a quick visual inspection. At the time of this writing, a working V310 was available on E-bay with a "BuyItNow" price of $15. It is an older (i.e., about 1996-1998) 300 dpi color scanner, no longer in production. It has a one-piece folded optical assembly (the big black thing).

You can be sure it's a one-piece assembly because the are no other moving components visible through the window. If this was a split assembly, there would be a separate mirror assembly across the middle of the scanning window. There is a large shielded box containing the bulk of the scanner's electronics on the bottom of the scanning chamber. This suggests that the cable to the optical head carries only the CCD clocks, CCD analog output and illuminator drive signals. That is exactly what we're looking for. It will still be necessary to determine which CCD chip is used and what the "pinout" of the cable is, but this scanner makes a good candidate as a CCD donor.

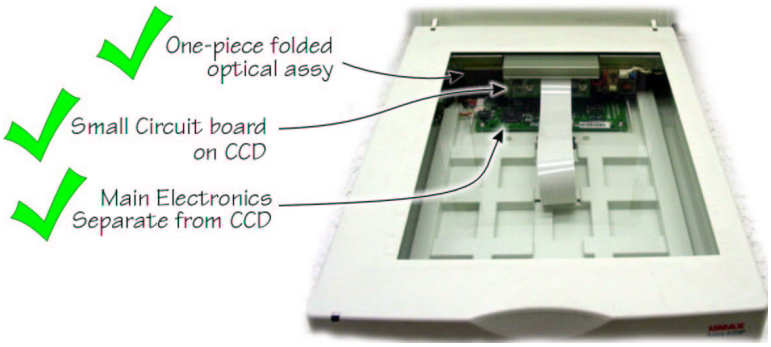

Umax Astra 610P

Like the Microtek V310, the Umax Astra 610P (below) appears to be another good CCD donor. It is a 600dpi color scanner, also out of production. At the time of this writing, a brand-new, in-the-box 610P was available on E-bay with a "BuyItNow" price of $30. It has a one-piece folded optical assembly, easily confirmed by the empty scanner case. (Three-piece optical assemblies have not been used in low-cost flatbed scanners for about a decade). The cable leading to the CCD is clearly evident and it connects to a main electronics board on the bottom of the scanner case. A relatively small circuit board on the bacof og the CCD module also suggests that the there is not much signal processing circuitry there. Again, this is what we're looking for – an uncomplicated CCD buffer board. As with the Microtek scanner, it will still be necessary to determine which CCD chip is used and what the "pinout" of the cable is, but this scanner makes a good candidate as a CCD donor.

The next two photographs show scanner features that are undesirable in donor scanners.

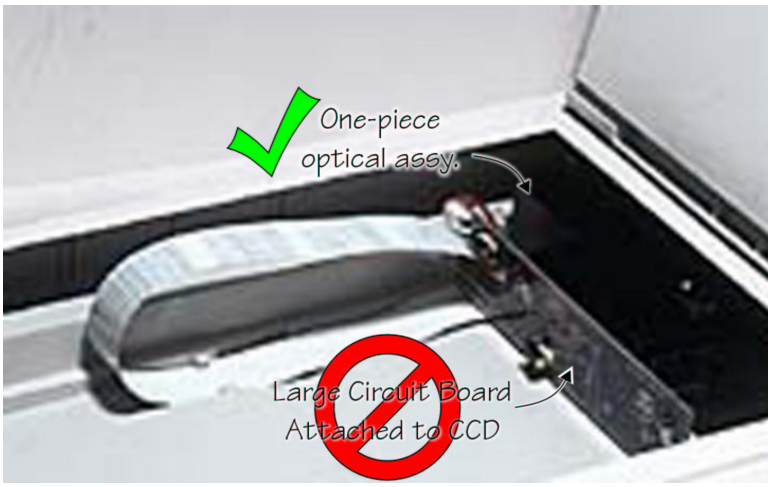

CCD Circuitry Not Separate from Signal Processor

The first of these scanners (model unknown) is a relatively new scanner with highly integrated electronics. Although it clearly has the prerequisite single-piece folded optical assembly, the large circuit board loaded with surface mounted IC's suggests that it would be difficult to locate and isolate the CCD signals. Further, since the CCD is closely coupled to the signal processing board, it is likely that the analog output of the CCD is unbuffered. If so, attempting to run a cable from the CCD down to our own controller board would likely result in a noisy signal.

The next scanner, a very old (late 80's) HP Scanjet Plus (before HP was numbering its models), is not a suitable candidate because it has a moving mirror assembly. The mirror assembly is clearly visible about halfway down the scanning window with the illuminator at its home position (note illuminator at top of window as shown in the photograph).

"Ancient" (c. 1989) HP Scanjet Plus w/separate moving mirror assy.

Step 2. Determine the 4 basic items of technical information for the donor scanner

As stated previously, the four specific pieces of information that need to be determined about any "donor" scanning head are:

1) Approximate optical path lengths (object and image distances, accurate to within a few %)
2) CCD manufacturer and part number (lets you find CCD data sheet)
3) Useful mounting points
4) Scanning head cable connection info:
   - power supply voltages and pin/wire numbers
   - illuminator control signals and pin/wire numbers
   - CCD clock/timing signals and pin/wire numbers
   - CCD analog output signal(s) and pin/wire number(s)

If you are fortunate enough to know someone who has already done this for your donor scanner, give him/her a call, get the information and walk away happy. Your life has been made easy for you. You can skip the most difficult step. Go on to Step 3.

Step 2, Item 1: Determine approximate optical path lengths

Please refer to Appendix A – "A Little Background on how CCD Scanning Heads are Built" for some insight into the kinds of folded path arrangements you might find in a CCD scanning head.

NOTE: All optical calculations in this application note are first-order approximations based on the "paraxial" lens equations, which are accurate enough for the design purposes described here.
ALSO NOTE: By convention, all image distances are negative for the paraxial equations.

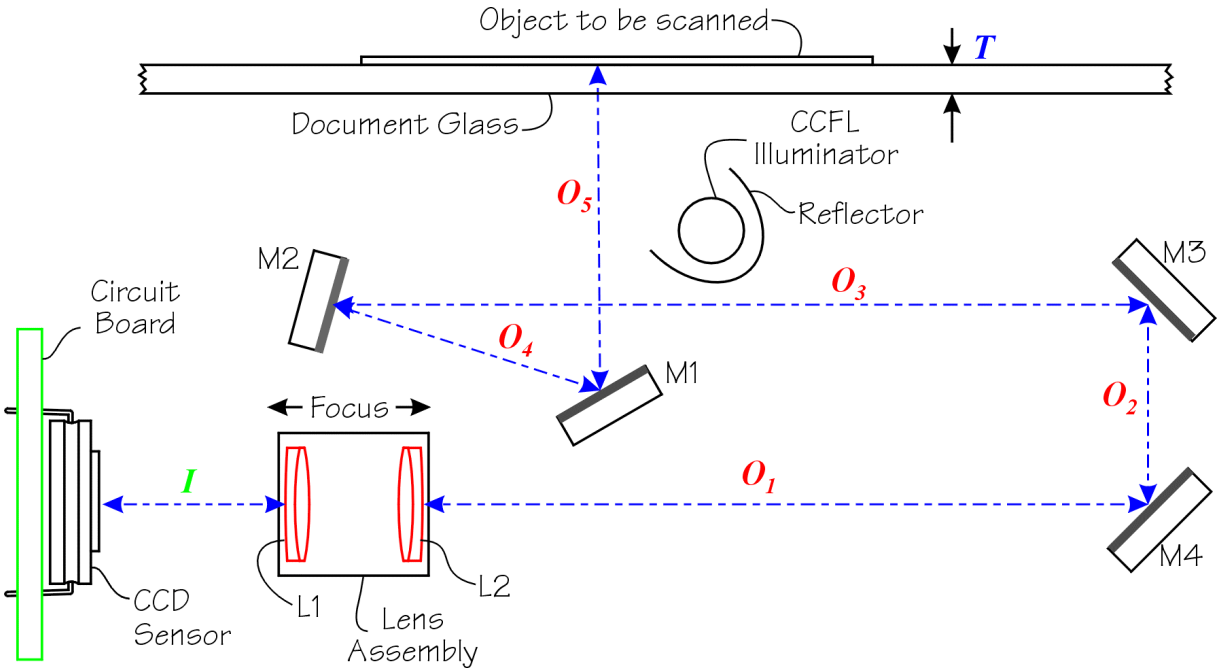

Representative Example for Optical Path Measurement

There are two methods of accomplishing this step: the ***empirical method*** and the ***direct measurement method***. The empirical method is much easier, but the numbers you get aren't as accurate.

Do for BOTH Direct AND Empirical methods

Measure the distance ***D*** from the top of the scanning head (the side with the opening for imaging) to the top of the document glass. (This includes the thickness of the glass, usually 3.0 mm – about 1/8 inch).

Direct Measurement Method of Optical Path Length Determination

The direct measurement method is the most reliable method of path length determination, but it requires that you open up your scanning head and make accurate measurements of the relative positions and distances between the mirrors, the lens and the CCD chip itself. Otherwise, it is simply an exercise in tracing the number of bounces in the folded optical path, measuring the length of each path segment, and adding them all up. Don't forget to include the length of the outermost path segment which runs from the object being scanned to the first bounce. It will probably be necessary to mentally re-assemble the scanning head into the optical chamber to determine this final path length. These measurements should be made without changing the lens focus adjustment so that accurate object and image distances can be determined.

Using the illustration above as an example, take an initial estimate $\boldsymbol{I_{EST}}$ of the image distance $\boldsymbol{I}$ by measuring the distance from the lens nearest the CCD (L1) to the surface of the window on the CCD body. Always save this number as a negative number. *This is NOT the image distance, but it will be used later to determine the image distance in a later step.* Although it may be difficult to make this measurement accurately, try to make a good estimate. Also measure the thickness $\boldsymbol{T_{CCD}}$ of the CCD package body from the surface of the window to the backside of the package. Again, make the best measurement you can.

The object distance $\boldsymbol{O}$ is the sum of all of the object path segments $\boldsymbol{O_x}$ between lens L2 and the object being imaged. That is: $\boldsymbol{O = O_1 + O_2 + O_3 + O_4 + O_5}$. Be sure to include the thickness $\boldsymbol{T}$ of the document glass in the measurement of $\boldsymbol{O_5}$. Be ABSOLUTELY CERTAIN that you are measuring ALL of the bounce paths in the folded optical assembly. If there are any second surface mirrors, add the thickness of the mirror to all path measurements involving that mirror.

At this point you will have three important numbers: $\boldsymbol{I_{EST}}$, $\boldsymbol{T_{CCD}}$ *and* $\boldsymbol{O}$. *Save these numbers. You will have to come back to this point and perform the following calculations after getting the CCD data sheet.*

The number you need to finish your measurement of the image distance $\boldsymbol{I}$ is the distance from the surface of the CCD window to the surface of the photosensors inside the chip. This is not usually specified directly. A distance $\boldsymbol{\delta_B}$ from the backside of the chip to the sensor surface is usually given. If so, then calculate $\boldsymbol{I}$ as follows (remember that both $\boldsymbol{I}$ and $\boldsymbol{I_{EST}}$ are negative numbers!):

$$I = I_{EST} - \left(T_{CCD} - \delta_B\right)$$

If the distance $\boldsymbol{\delta_F}$ from the window surface to the photosensor surface is specified directly, then calculate $\boldsymbol{I}$ as follows (remember that both $\boldsymbol{I}$ and $\boldsymbol{I_{EST}}$ are negative numbers!):

$$I = I_{EST} - \delta_F$$

(Note that $\boldsymbol{\delta_F + \delta_B = T_{CCD}}$)

If neither distance is specified, then use the following rough approximation ($\boldsymbol{I}$, $\boldsymbol{I_{EST}}$ are negative):

$$I = I_{EST} + 0.4T_{CCD}$$

Empirical Method of Optical Path Length Determination

This method requires a working scanner, so if you've destroyed your scanner already you're out of luck. You'll just have to go back and do the direct measurement method.

If however, you had the foresight to keep your scanner in one piece and it works, then do the following:

1) Place a ruler across your scanning bed and scan it. Your scan should cover the full width of the bed and should look something like this:

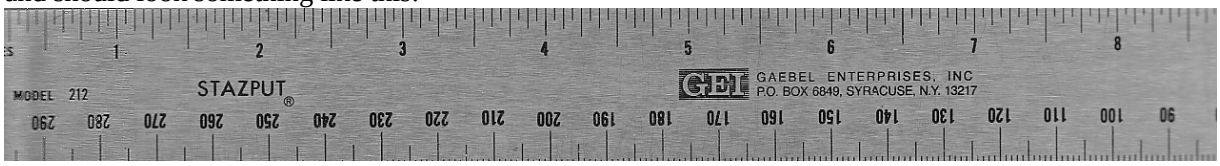

2) Lift the ruler 6 inches (as exactly as possible) off of the scanning bed and scan it again. The result should look something like this:

Note that the second scan is somewhat dark and out of focus. That is to be expected.

3) Examine the two scans and the ruler and try to determine the scan widths as accurately as possible. Save these numbers as ***SW*0** (bed) and ***SW*1** (6 inches above bed). For the sample scans shown above, the results were:

$SW0 = 8.5''$
$SW1 = 11.75''$

4) Calculate the object distance as follows:

$$O = \left[\frac{SW0}{SW1 - SW0}\right] \times 6''$$

For the scan samples shown above:

$$O = \left[\frac{8.5}{11.75 - 8.5}\right] \times 6''$$
$$\cong 15.7 inches$$

At this point you have only the object distance. After you have determined the CCD part number and manufacturer and gotten the datasheet, you will need to return to this point to estimate the image distance.

From the manufacturer's data sheet, determine the length ***L*** of the sensor array. As an example, for the Toshiba TCD-2255D chip ***L*** = 21.6 mm = 0.85 inches.

Now estimate the image distance ***I*** as follows:

$$I = \frac{-L \times O}{SW0}$$

For the scanned examples and a TCD-2255D chip, this would work out to:

$$I = \frac{-L \times O}{SW0} = \frac{-0.85 * 15.7}{8.5}$$
$$= -1.57 inches$$

Step 2, Item 2: Determine the CCD's manufacturer and part number

It is entirely possible that you will have to destroy a scanner to get this information. The reason is that the part number of the CCD is printed on the BOTTOM side of the chip, and the chip is soldered into a circuit board. Generally speaking, any attempt to remove it will either destroy the chip or the alignment of the scanning head. If it is possible to disassemble the scanning head and reassemble it without destroying its alignment, then a second scanner will not be necessary. Otherwise, there's no need to be careful when tearing the scan head apart – you won't be able to use it again.

Toshiba and Sony manufacture the vast majority of linear CCD's used in flatbed scanners.

Once you have identified the CCD's manufacturer and part number, you'll need to get the data sheet. Often data sheets are available on the manufacturer's web site. If not, it may be necessary to contact the manufacturer's representative or to e-mail for tech support. A couple of useful websites are:

Toshiba Semiconductor web service: http://doc.semicon.toshiba.co.jp/indexus.htm
Sony Semiconductors datasheets: http://www.sel.sony.com/semi/number.html
Kodak Linear CCD (KLI Series) Data:
http://www.kodak.com/cgi-bin/webCatalog.pl?product=KODAK+KLI+Series+Image+Sensors&cc=US&lc=en

Step 2, Item 3: Identify useful mounting points

Referring back to the drawing of the suspended CCD scanning head in the Overview section of this application note, examine the scanning head for good locations for making a solid attachment. Every scan head is a little different. Use your imagination. You're looking for good solid places where you can drill and tap a hole, make a weld, or clamp solidly. You will often find good mounting points where the scanning head meets a guide rod or reference surface.

Step 2, Item 4: Determine Scanning head cable connection info

WARNING - This is a task that may require a fair amount of technical skill.

The basic idea is to take the CCD datasheet and follow the traces on the circuit board back to the connector. Very often there is a clock driver chip buffering the CCD's timing signals and an on-board voltage regulator. Be sure to measure supply voltages. In essence, you are attempting to re-draw the schematic of the CCD board, which is a fairly straightforward (but tedious) exercise in reading through datasheets and tracing signal paths.

If you can't do that, try locating an authorized service center for the scanner manufacturer. You might be able to convince them to give you the schematics. (Don't hold your breath, though – they're usually not anxious to hand out technical data.) Alternatively, contact technical support for the manufacturer and see if you can persuade them to send you a schematic.

Failing that, try giving the board to a technician or engineer friend of yours and see if he/she will trace it out for you.

Failing *that*, wait for someone else in the Rollscanning group to do it and use that information.

NOTE: You're probably going to discard the illuminator in the scanning head (or at least leave it unused), so you can probably ignore those connections. The illuminator drive circuit (CCFL inverter) is easy to identify. It is usually on its own little PC board and has a little transformer on board. The connections to the CCFL come straight to this little circuit board. A typical CCFL inverter looks like one of the boards pictured below:

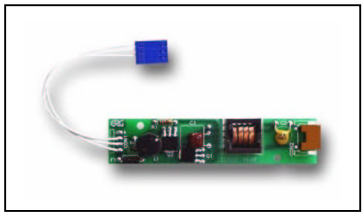

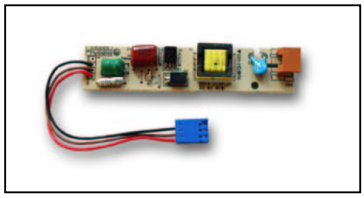

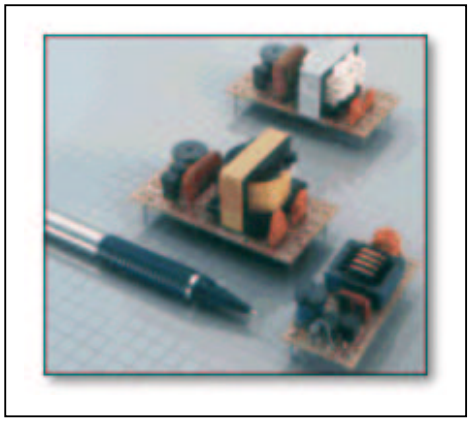

<u>If you've gotten this far, it all gets easier from here on</u>

Step 3. Calculate the new path lengths and determine head height

Now, given the width of the rolls that you want to scan, we need to determine where the scanning head should be mounted. We now should have all of the following information available Remember that in ALL calculations, the image distance ***I*** is a negative number:

W	New scan width (your roll width plus a little margin – at least ½" extra)
I	old Image Distance
O	old Object Distance
SW0	old scan width
D	old distance from top of scanning head to document (top of document glass)

We need to determine ***h***, the height of the scan head above the scanning path. It is calculated as follows:

Total Old Optical Path Length (OPL):

$$OPL = -I + O + L_{LENS}$$

where: L_{LENS} is the Length of the lens assembly (* don't worry, it drops out)

Total New Optical Path Length (NPL):

$$NPL = \frac{W}{SW0}(-I + O) + L_{LENS}$$

Difference (NPL-OPL):

$$diff = NPL - OPL = \left(\frac{W}{SW0}(-I + O) + L_{LENS}\right) - \left(-I + O + L_{LENS}\right)$$

$$= \frac{W - SW0}{SW0}(-I + O)$$

Head Height above roll (***h***):

$$h = diff + D$$

A couple of interesting, but not necessarily important numbers:

<u>Magnification Factor (will be negative):</u>

$$M = \frac{O}{I}$$

<u>Effective (Paraxial) Focal Length (will be negative):</u>

$$F = \frac{O * I}{O - I}$$

Path Length Calculation Examples:

As an example, we once again use the sample numbers derived empirically for the sample scanner to determine the new head height.

D	= 0.42 inches
I	= 1.57 inches
O	= 15.7 inches
SW0	= 8.5 inches

example 1: ***W*** = 12 inches (for scanning 11.25 piano rolls and O-rolls)

$$
\begin{aligned}
h &= diff + D \\
&= \frac{W - SW0}{SW0}(-I + O) + D \\
&= \frac{12 - 8.5}{8.5}(-(-1.57) + 15.7) + 0.42 \\
&= \frac{3.5}{8.5}(17.27) + 0.42 \\
&= 7.53 inches
\end{aligned}
$$

example 2: W = 14.5 inches (for scanning Violano and Welte rolls)

$$
\begin{aligned}
h &= diff + D \\
&= \frac{W - SW0}{SW0}(-I + O) + D \\
&= \frac{14.5 - 8.5}{8.5}(-(-1.57) + 15.7) + 0.42 \\
&= \frac{6}{8.5}(17.27) + 0.42 \\
&= 12.61 inches
\end{aligned}
$$

Steps 4, 5, and 6: Wrapping up

Step 4. Build a scanning head holder and light shield for your transport
Step 5. Connect CCD to new scanner controller and test
Step 6. Re-focus the CCD

At this point, you have pretty much everything you need. You now know the height that the scanning head should be mounted over the music roll, so it is just a matter of putting together a set of appropriate support brackets to do so. The RollSCAN-1 documentation and software package explains in detail how to connect a CCD to the RollSCAN-1 controller board and verify that it is working. A software focusing utility is provided. Refer to the RollSCAN-1 documentation for further details.

HAPPY SCANNING!

APPENDIX

A little background on how CCD scanning heads are built

A typical CCD-based scanning head is a fairly sophisticated assembly, usually made up of a cast housing into which a CCD sensor, an illuminator (usually a CCFL), a multi-element lens and several mirrors are installed. The cast housing is a strong and rigid affair that keeps all of the component parts in proper mechanical registration with one another. There are usually a couple of adjusters provided for setting the "azimuth" angle of the CCD and for adjusting focus, usually by moving the lens. The scanning head is usually aligned and focused in a specially designed fixture at the manufacturer's facility.

One obvious question is "Why does the optical path have to be so long?"

The answer is really quite simple. To permit the use of less-expensive lens assemblies while minimizing optical distortions, it is necessary to keep the beam angle relatively shallow, preferably under 15 degrees. The wider the beam angle (corresponding to a wider field of view) the worse the lens distortion. The concept of beam angle is illustrated below:

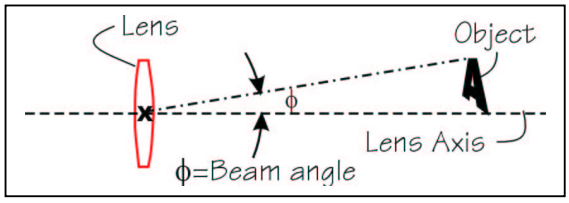

The beam angle is the angle formed between the lens axis and a line drawn from the maximum extent of the object and the center of the lens (X). In optics, everything is measured relative to the lens axis, so for an 8.5" scanning width centered about the lens axis, the maximum object extent is 4.25 inches; half the scanned width. The required objective distance, *O* (distance from lens to object) to keep the beam angle less than 15 degrees is given by:

$$O = \frac{8.5/2}{\tan\phi} = \frac{4.25}{\tan 15^\circ}$$
$$= 15.86 \textit{inches}$$

Remember: this is a *minimum* distance. On most scanners, the objective distance will be greater. Objective distances of 17 inches or greater are quite common on A4 (letter size) scanners. The greater the objective distance, the shallower the resultant beam angle. Shallow beam angles generally yield better optical performance.

As previously described, the scanning head's long optical path is made more compact by "folding" it several times with a set of carefully arranged mirrors. There are many different possible folded path configurations, and variations abound in the design of scanning heads. First surface mirrors are used in all but the cheapest of scanners.

Some representative schematic examples of folded optical systems for CCD-based scanning heads are shown below. In all of the illustrations, the imaging "bed" or window of the scanner is assumed to be parallel with the top of the illustration. It is also assumed that an enclosure (usually a cast housing) generally surrounds and shields the optical assembly from extraneous light sources. Usually, the inside of the enclosure has a flat black surface treatment to prevent light from outside of the optical path from reaching the sensor. (Such stray light would have the effect of "clouding" or "fogging" the resultant

image by reducing its contrast.) A slot at the top of the housing exposes the illuminator and permits light reflected from the object being scanned to enter the optical assembly.

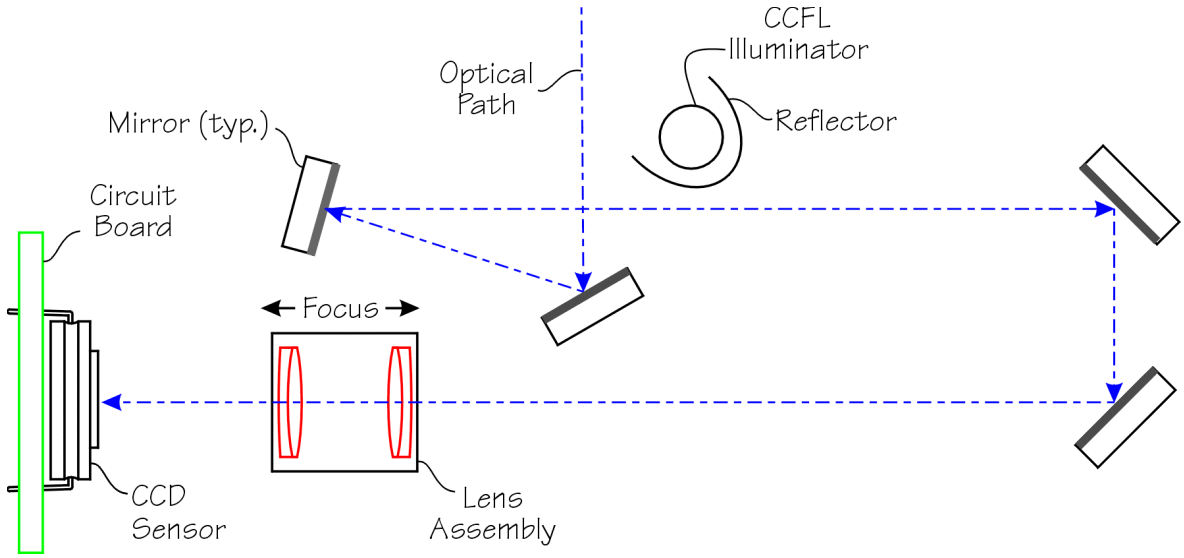

Four-mirror, four-bounce CCD scan head

The four-mirror, four-bounce folded optical assembly has been used by many scanner manufacturers, and is quite common. The mirrors are shown as first surface mirrors. Note that the angles and relative positions of the mirrors are highly critical. The effective objective distance is the sum of the lengths of all of the folded path segments. Similar folded path arrangements have been used by in a variety of scanners from Umax, Microtek, and others.

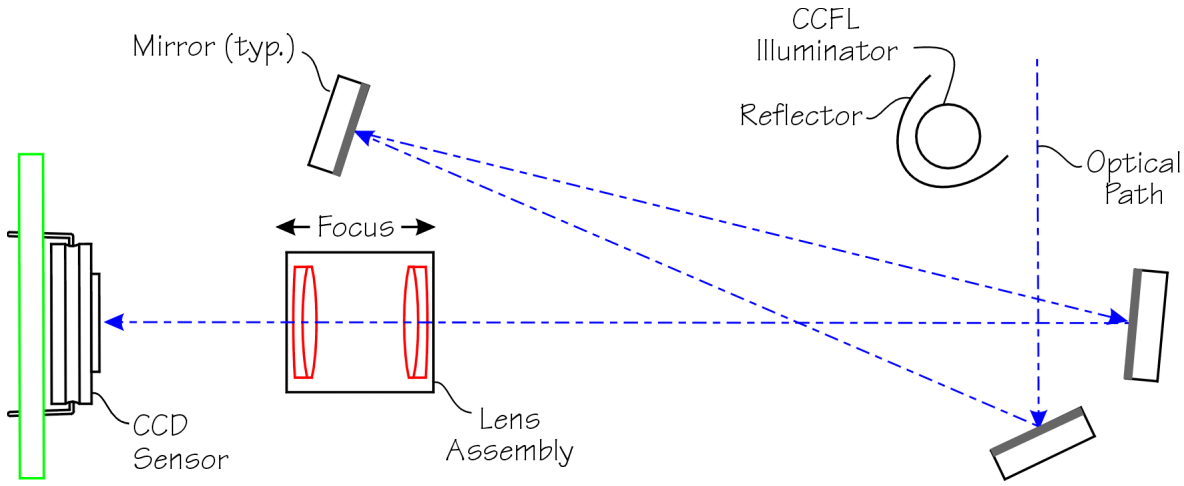

Three-mirror, Three-Bounce Optical Path

The figure above shows a typical three-mirror, three-bounce assembly. Both this and the four-mirror, four bounce system are very straightforward in design. You should be aware, however, that some systems have been designed with carefully constructed optical paths to get more than one bounce from at least one mirror. The illustration below shows such a scheme.

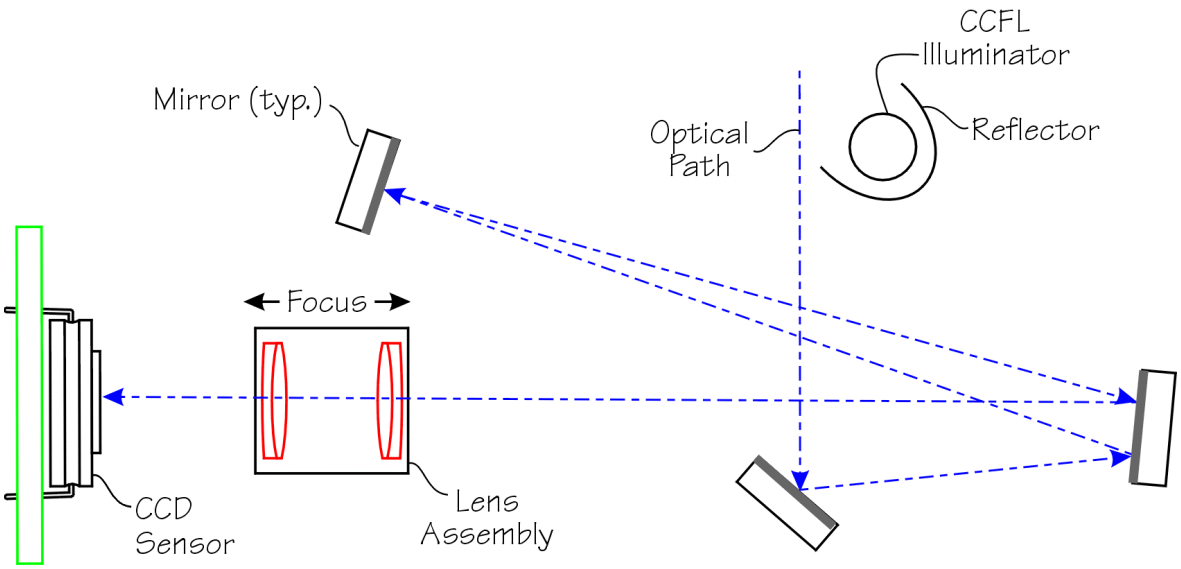

Scheme for getting more than one bounce from a mirror

In a US patent issued in 1998 to UMAX (US Patent No. 5,815,329: Tri-mirror multi-reflection optical path folding apparatus), this multi-bounce scheme is described in great detail. The following optical path illustrations appear in that patent.

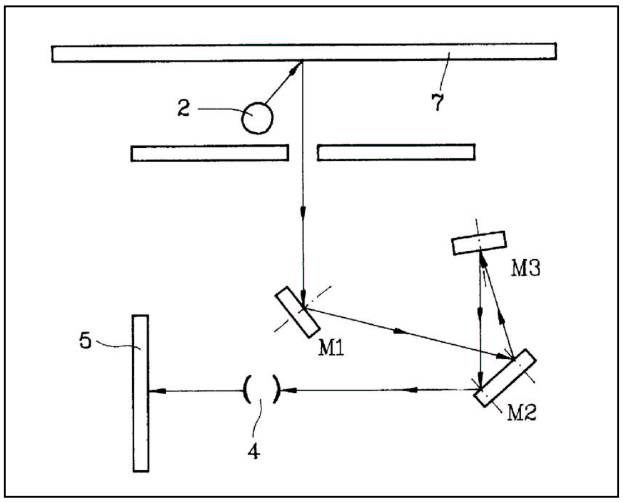

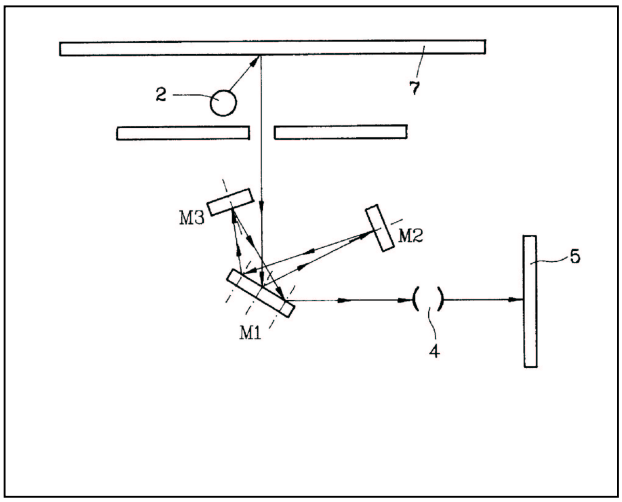

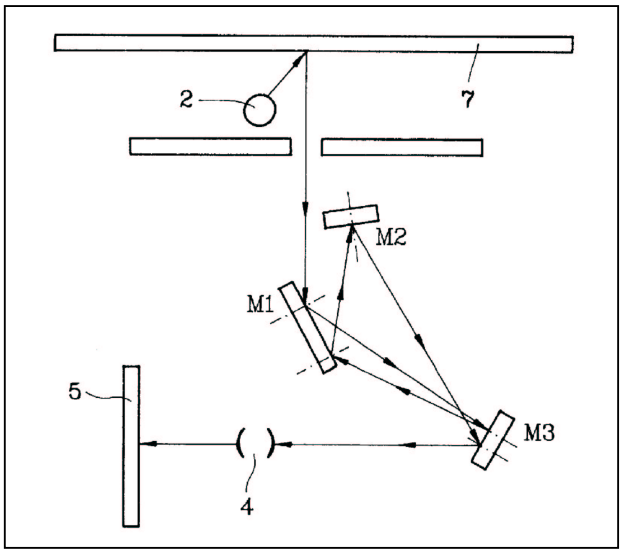
2
7
M2
M1
5
M3
4

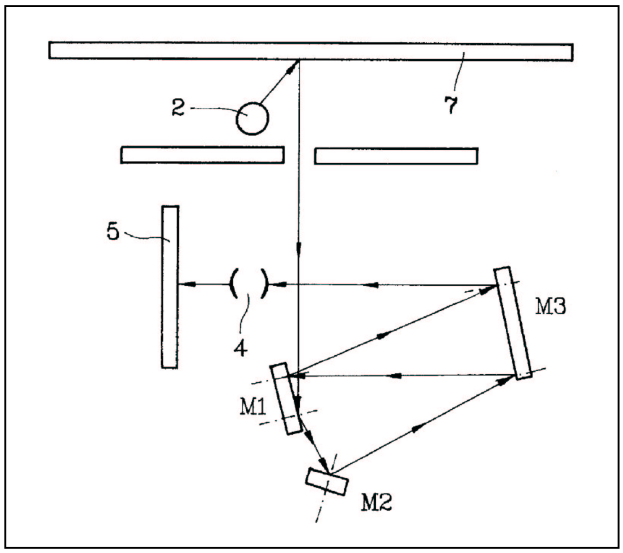
2
7
5
M3
4
M1
M2

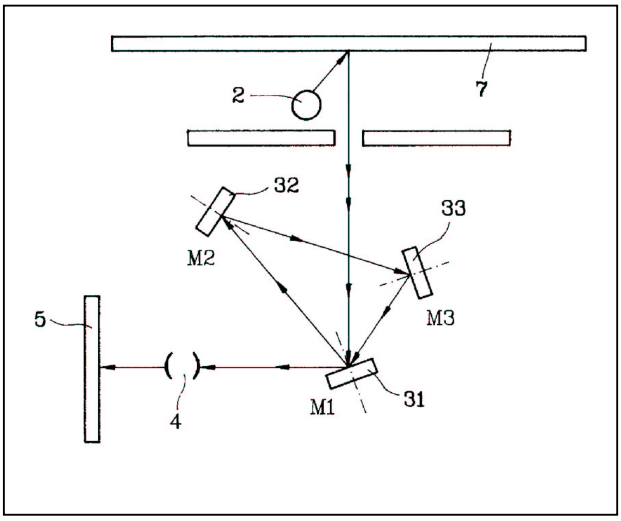
2
7
32
33
M2
M3
5
4
M1
31